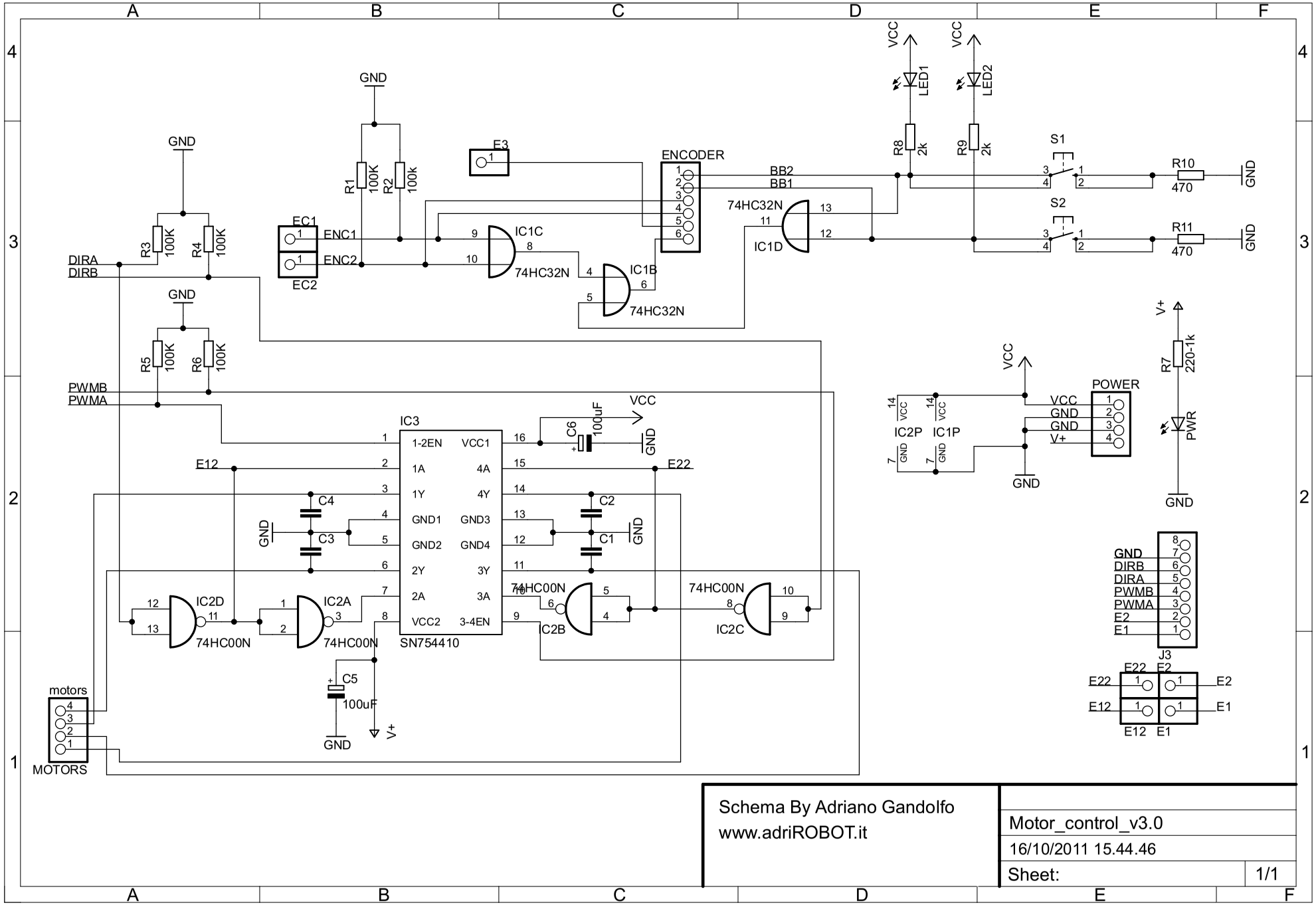

Schema By Adriano Gandolfo
www.adriROBOT.it

Motor_control_v3.0
16/10/2011 15.44.46
Sheet: 1/1