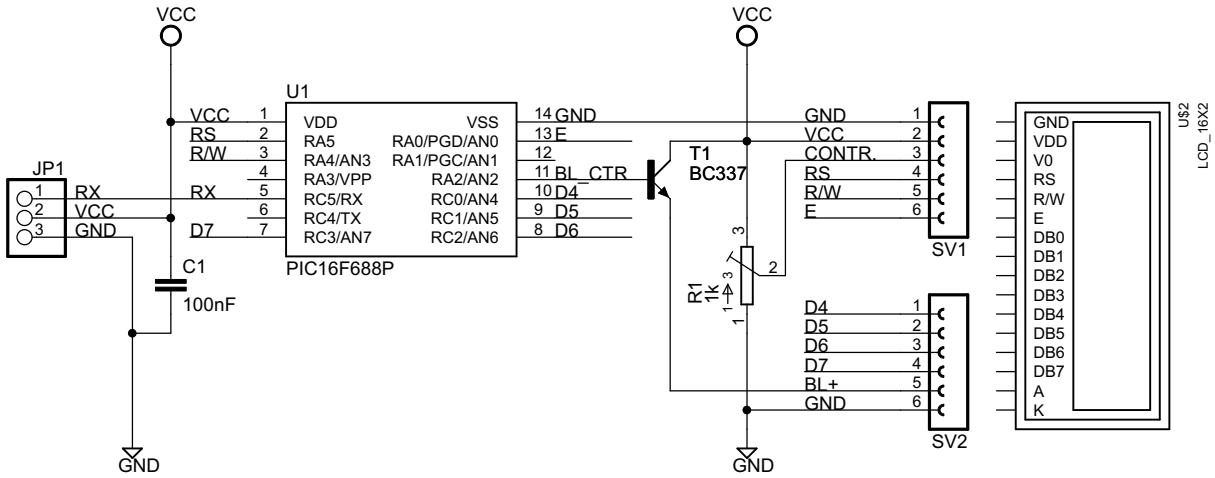

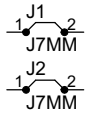

Schema By Adriano Gandolfo
www.adriROBOT.it

serLCD_2

not saved!

Sheet: 1/1