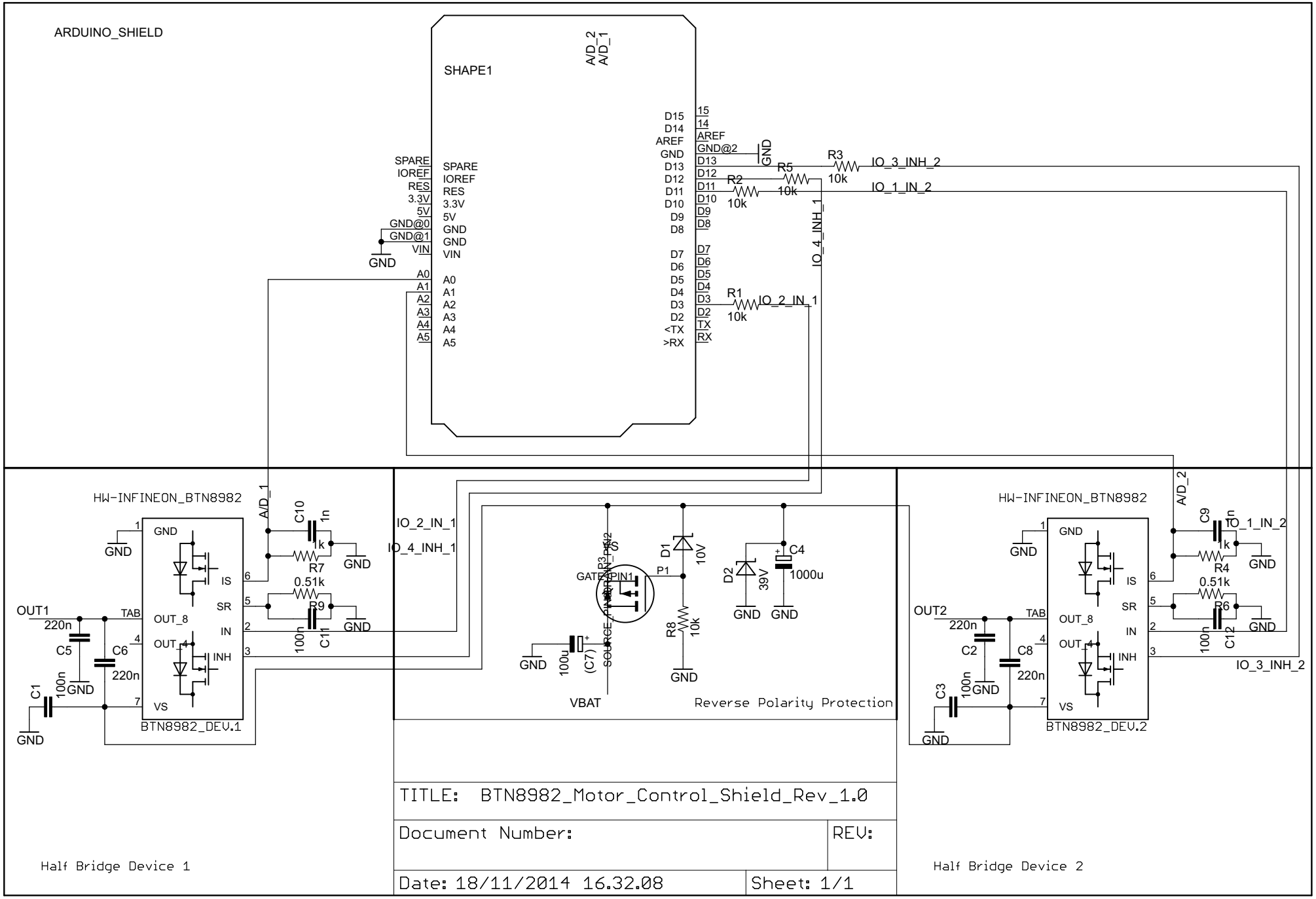
ARDUINO_SHIELD
SHAPE1
A/D_2
A/D_1
SPARE
IOREF
RES
3.3V
5V
GND@0
GND@1
VIN
A0
A1
A2
A3
A4
A5
D15
D14
AREF
GND
D13
D12
D11
D10
D9
D8
D7
D6
D5
D4
D3
D2
<TX
>RX
GND@2
R3
10k
IO_3_INH_2
R5
10k
R2
10k
IO_1_IN_2
IO_4_INH_1
R1
10k
IO_2_IN_1
HW-INFINEON_BTN8982
GND
IS
SR
IN
OUT_8
OUT_4
INH
VS
TAB
OUT1
220n
C5
C6
220n
C1
100n
A/D_1
C10
1n
1k
R7
0.51k
R9
100n
C11
BTN8982_DEV.1
IO_2_IN_1
IO_4_INH_1
GATE
PIN1
P1
D1
10V
D2
39V
C4
1000u
R8
10k
100u
(C7)
VBAT
Reverse Polarity Protection
HW-INFINEON_BTN8982
OUT2
C2
C8
C3
100n
A/D_2
C9
1n
IO_1_IN_2
R4
R6
C12
IO_3_INH_2
BTN8982_DEV.2
TITLE: BTN8982_Motor_Control_Shield_Rev_1.0
Document Number:
REV:
Date: 18/11/2014 16.32.08
Sheet: 1/1
Half Bridge Device 1
Half Bridge Device 2