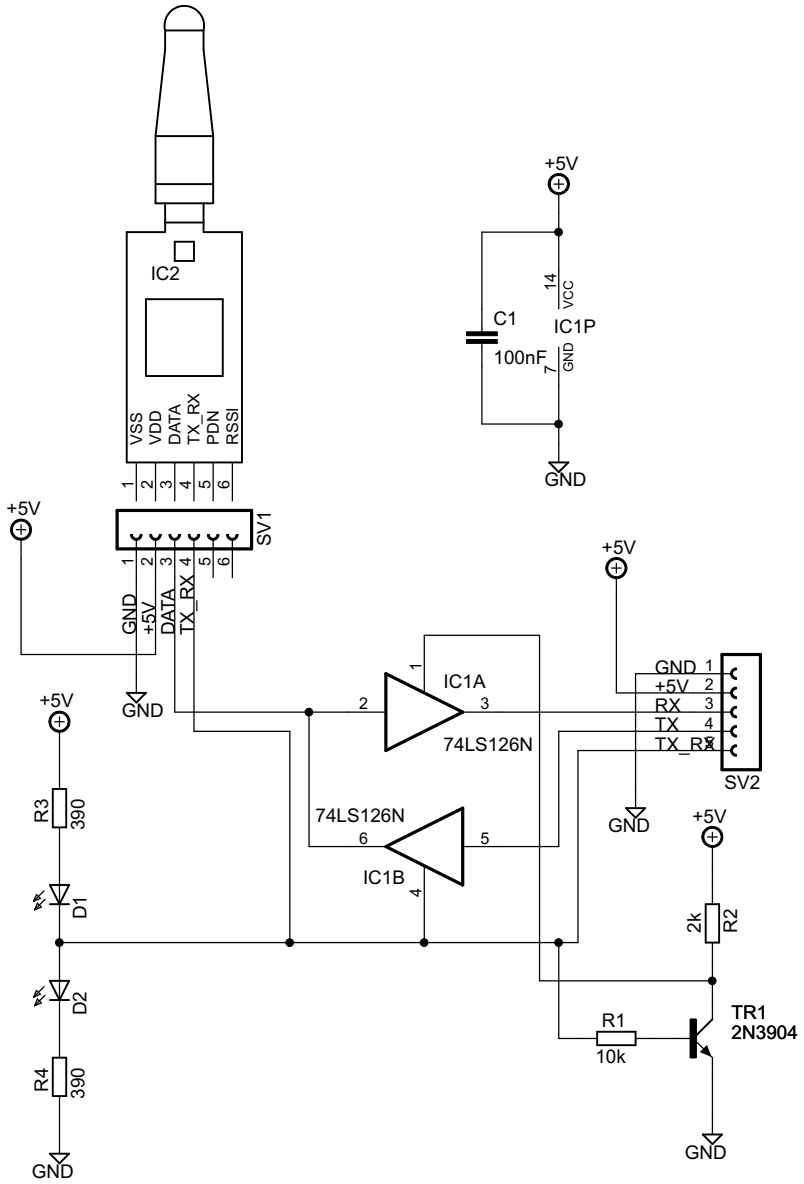

Schema By Adriano Gandolfo
www.adriROBOT.it

27982_interfaccia_arduino

13/05/2012 12.05.10

Sheet: 1/1