Schematic

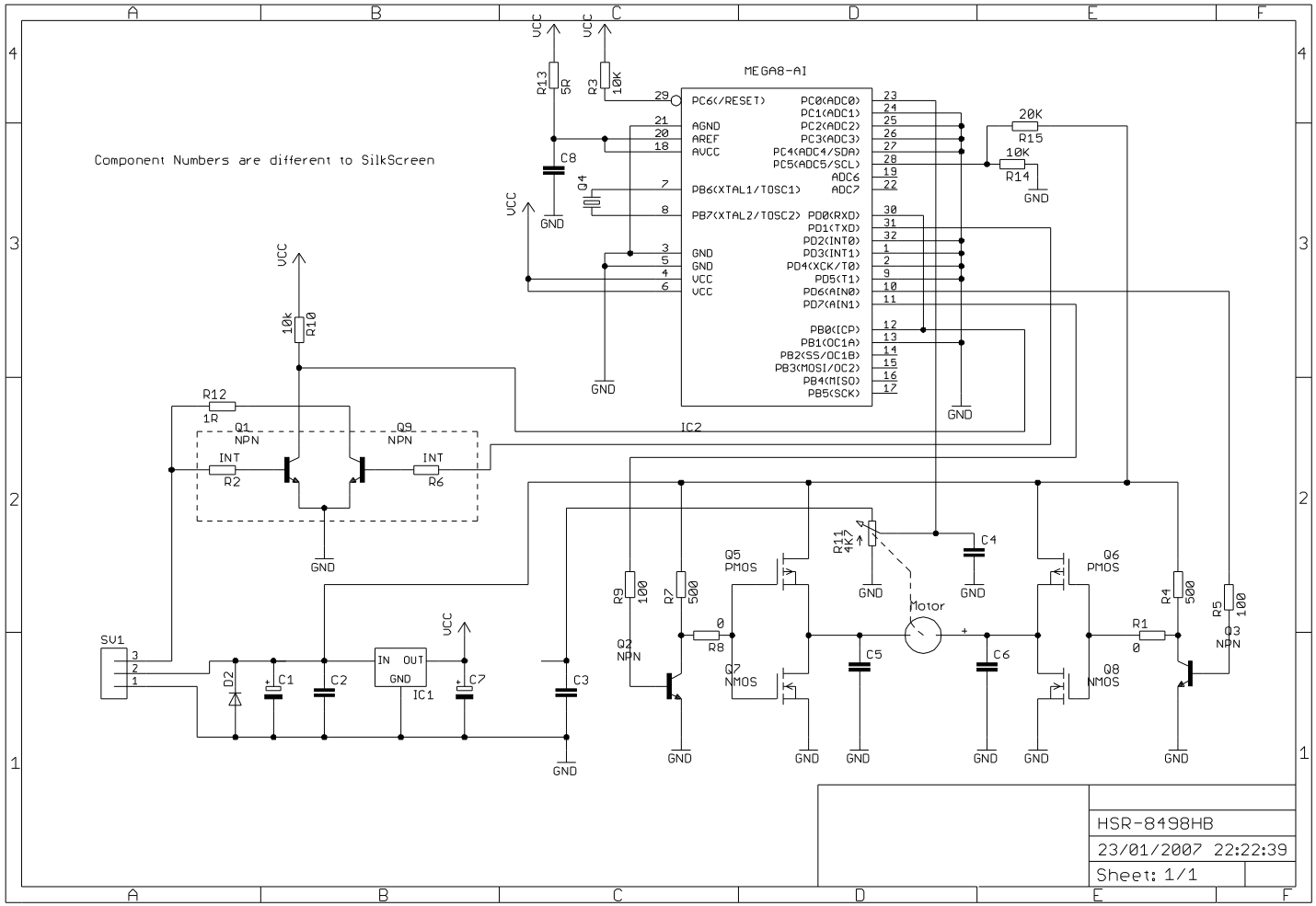
Component Numbers are different to SilkScreen
MEGA8-AI
PC6(/RESET)
AGND
AREF
AVCC
PB6(XTAL1/TOSC1)
PB7(XTAL2/TOSC2)
GND
GND
VCC
VCC
PC0(ADC0)
PC1(ADC1)
PC2(ADC2)
PC3(ADC3)
PC4(ADC4/SDA)
PC5(ADC5/SCL)
ADC6
ADC7
PD0(RXD)
PD1(TXD)
PD2(INT0)
PD3(INT1)
PD4(XCK/T0)
PD5(T1)
PD6(AIN0)
PD7(AIN1)
PB0(ICP)
PB1(OC1A)
PB2(SS/OC1B)
PB3(MOSI/OC2)
PB4(MISO)
PB5(SCK)
R13 5R
R3 10K
C8
G4
20K R15
10K R14
10k R10
R12 1R
Q1 NPN
Q9 NPN
INT R2
INT R6
IC2
SV1
D2
C1
C2
IN OUT GND
IC1
C7
C3
R9 100
R7 500
Q2 NPN
R8 0
Q5 PMOS
Q7 NMOS
R11 4K7
C4
C5
C6
Motor
Q6 PMOS
Q8 NMOS
R4 500
R1 0
R5 100
Q3 NPN
HSR-8498HB
23/01/2007 22:22:39
Sheet: 1/1